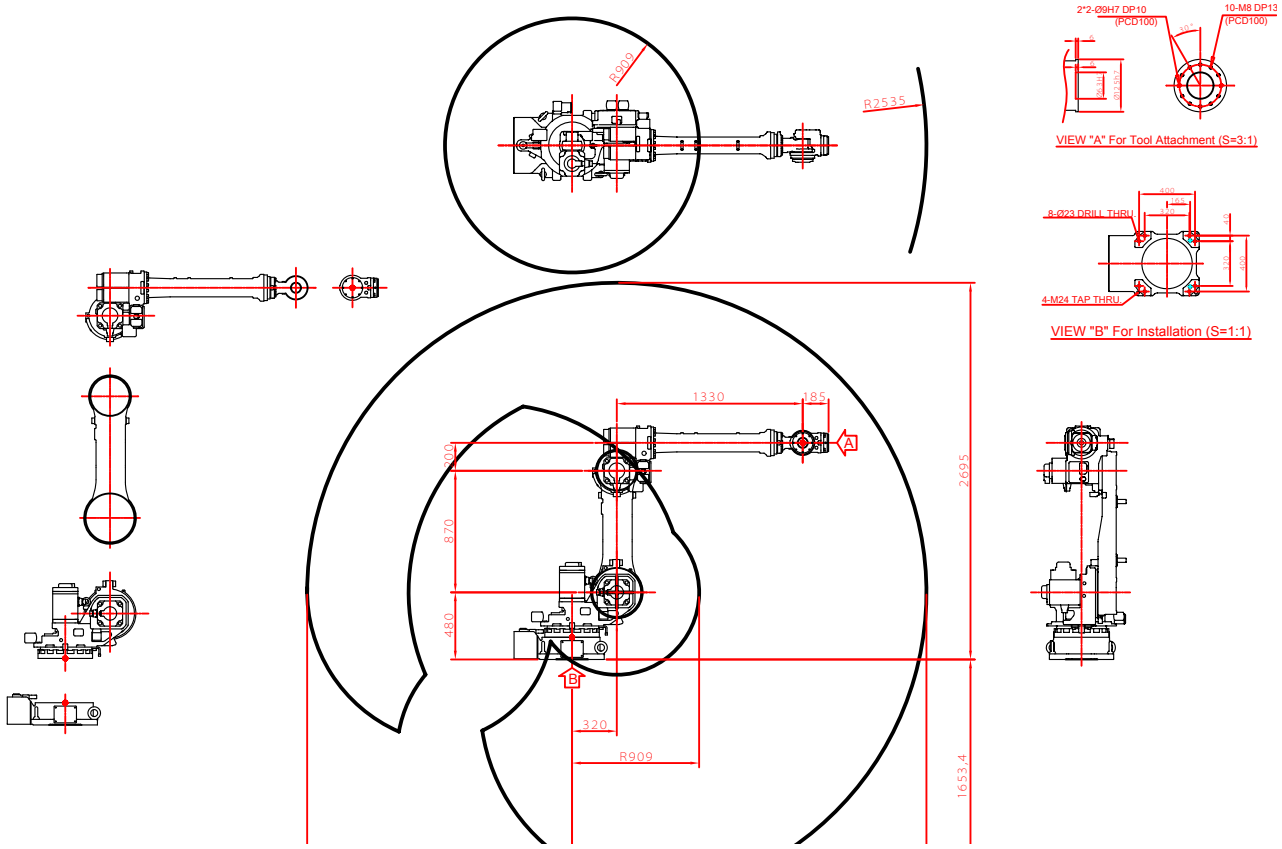
R909
R2535
1330
185
A
B
870
480
320
R909
2695
1653.4
2*2-Ø9H7 DP10
(PCD100)
10-M8 DP13
(PCD100)
VIEW "A" For Tool Attachment (S=3:1)
8-Ø23 DRILL THRU
4-M24 TAP THRU
VIEW "B" For Installation (S=1:1)